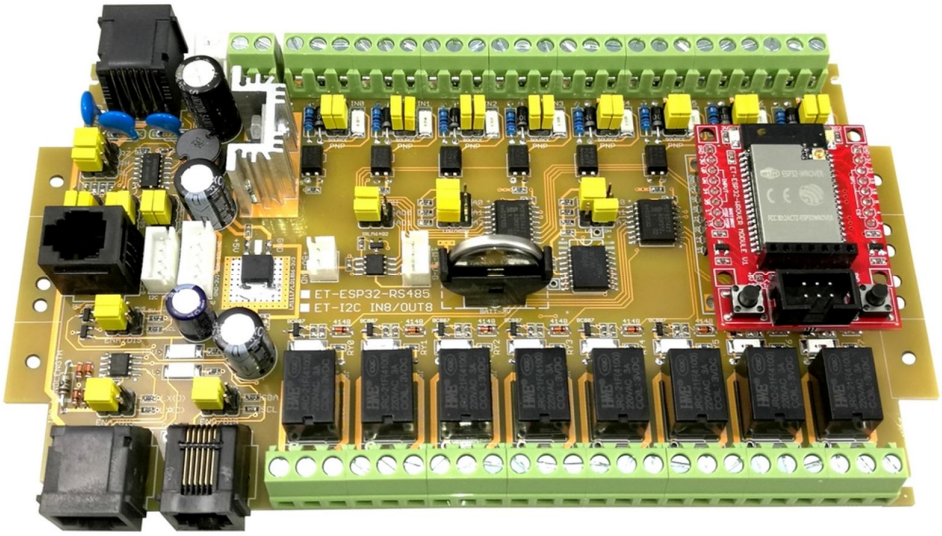


**ET-ESP32 RS485** is a Board Microcontroller that entirely consists of basic I/O Devices and also supports additional expansion unit easily. In a part of Microcontroller on board, it uses Module ESP32 from Espressif System model “ESP32-WROVER-I” to be the main MCU. This ESP32 supports communications via WiFi, Bluetooth, USART:RS232 RS422/485, SPI Micro SD Card and I2C Bus.

For basic I/O Devices internal board, it consists of OPTO INPUT to connect to Sensors that support the use of NPN Sensor and PNP Sensor. There is RELAY OUTPUT as NO/COMMON/NC type to control the operation of electrical appliances; it is provided with CHIP Time Base that can be applied to setup time in order to control operation of electrical appliances as well. There is BUS System to expand 1-Wire I/O and BUS to expand I2C BUS I/O, it supports both 3.3V and 5V Devices; moreover, there is the BUS System in a format of IC Long Length that can support I2C BUS Communication for a long distance of 20 meters.

## SPECIFICATIONS OF BOARD

- 8-Port Output Relay 1 Contact: NO/COMMON/NC (3A Contact Rating) is separately controlled via CHIP PCF8574 and Address Positions are independently setup.
- 8-Port OPTO Input can choose Input Type to be either NPN(Sink) or PNP(Source) as preferred; checks its status via PCF8574A; and setup Address Positions independently.
- 1-Channel Line Driver can be used to be either RS422/ RS485 4-Wire/ RS485 2-Wire as preferred.
- 1-Channel I2C Long Length Bus Driver supports I2C Communication for a long-distance of 20 meters.
- 2-Port 5V I2C Bus as RJ11 6Pin Male
- 1-Port 5V I2C Bus as 4Pin Wafer 2.5mm.
- 1-Port 3.3V I2C Bus as 5Pin Wafer 2.5mm.
- 1-Port 5V 1-Wire Bus via DS2482 I2C to 1-Wire Bridge
- I2C RTC: Real Time Clock DS3231, provided with Battery Backup
- I2C EEPROM: 24LC16B 16Kbit(2Kbyte) Data EEPROM
- Switching Regulate 5V/1A is compatible with a maximum of INPUT VOLTAGE 35V
- LDO Regulate 3.3V/1A
- PCB Size: 10.5cm X 19cm supports in mounting ADAPTER RAIL DIN35 and DIN BOX

## HOW TO USE RS422/485

It provides Circuit Line Driver on Board ET-ESP32 RS485 that is designed for RS422/485 Communication, it can receive-send data for a long distance. There is 1 channel that can be applied and used to receive-send data by using Signal of USART2; it has to choose and setup Hardware Pins of Module ESP32 WROVER as follows;

- **RX2** uses **Pin IO26** to connect signal and receive data.
- **TX2** uses **Pin IO27** to connect signal and send data.
- **DIR** uses **Pin IO25** and it has to setup this Pin to be Output Logic. When its status becomes **LOW**, it is the direction of receiving data for RS485 Half Duplex Communication; or, it disables Transmitter when it setup the operation as RS485 Full Duplex. On the other hand, when its status becomes **HIGH**, it is the direction of sending data for RS485 Half Duplex Communication; or, it enables Transmitter when it setup the operation as RS485 Full Duplex.

USART2 can be setup to choose various formats of operation for Circuit Line Driver; it can be either RS422 or RS485 as preferred. For RS485 Communication, it can be either Full Duplex or Half Duplex; and it can be used with either Signal 2-Wire or Signal 4-Wire as preferred. Please set Jumper as follows;

- **RS422 Full Duplex 4-Wire Communication**: It is Point-To-Point Communication that is the same as RS232 Communication but the distance of this communicating format is longer. For RS232 Communication, the distance of sending-receiving data is not to exceed 50 feet or 15 meters; but, it will be 400 feet or 1200 meters long if it is RS422 Communication. It can change the signal for sending-receiving data from RS232 to RS422, without changing or modifying any software.
- **RS485 Full Duplex 4-Wire Communication**: It is Serial Communication as same as RS422 Communication, but the operation of program has an additional task, especially a part of Line Driver to control receiving-sending data and Packet of data for communication. There are regulations of receiving-sending data, including ID Code of each device; in this case, it exactly knows which device is communicating to device internal Bus. The strong point of this communication format is to connect several sets of device together in the same BUS like network.
- **RS485 Half Duplex 2-Wire Communication:** This communication format is to alternate between receiver and sender by using the same Cable; in this case, this Cable also alternates functions between receiver and sender. Each device in the same Bus has to alternately receive and send data into the Cable according to the specified priority and regulations; moreover, it has to control direction of Line Driver to be either receiver or sender. This communication format is well-known and used world-wide such as Modbus RS485 Protocol Communication.

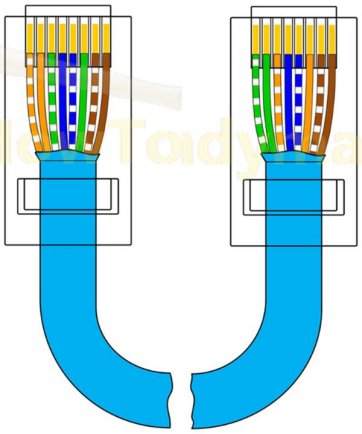

**It shows features of Cable that is used with RS422 and RS485 4-Wire (Master-to-Slave).**

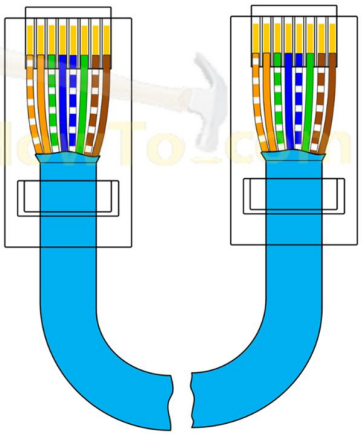

**It shows features of Cable that is used with RS485 2-Wire and RS485 4-Wire (Slave-to-Slave).**

## RS422 FULL DUPLEX 4-WIRE COMMUNICATION

This communication format can be used with Point-To-Point Communication; it is the same as RS232 Communication but the distance of this communication format is longer. It can use the format of RS232 Communication; it only changes the Circuit Line Driver on both sides of device to standard Balance Line, and now both devices can communicate each other. In this case, it must enable Line Driver of both sender and receiver all the time because it can receive and send data all the time, without any problem.

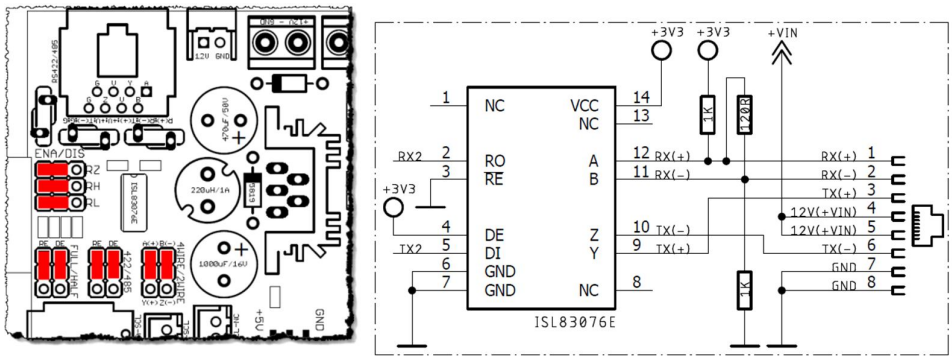


**It shows how to set Jumper of Line Driver for receiving-sending data as RS422 Communication.**

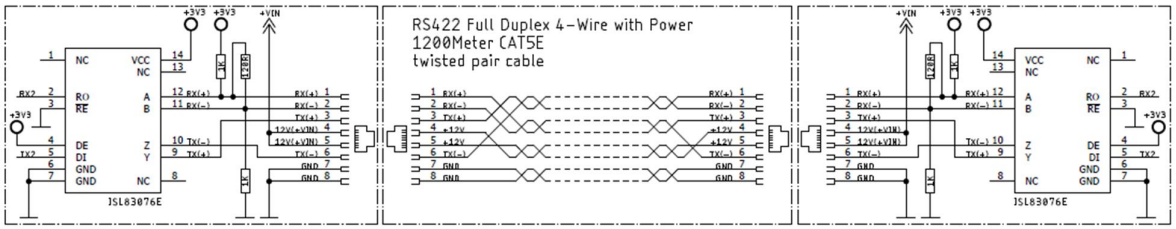


**It shows diagram of Circuit RS422 Communication.**

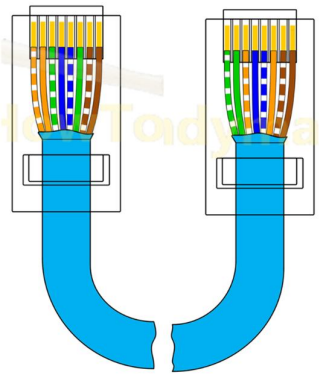

**It shows features of Cable of RS422.**

## RS485 FULL DUPLEX 4-WIRE COMMUNICATION

This communication format is similar to RS422 Communication but it is more special because it can connect more than 2 devices in the same BUS; in this case, one device must be setup as Master and the remaining devices must be setup as Slave. The Communication is in a format of Full Duplex; it separates signal for sending data and signal for receiving data. The Cable that is connected between Master device and Slave device must be crossed; TX(+) must be connected to RX(+) and Tx(-) must be connected to RX(-) of opposite side. The Cable of all Slave devices must be connected in parallel.

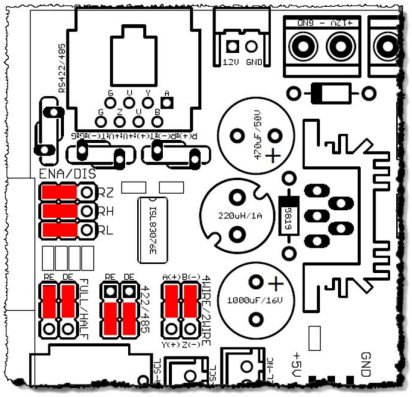


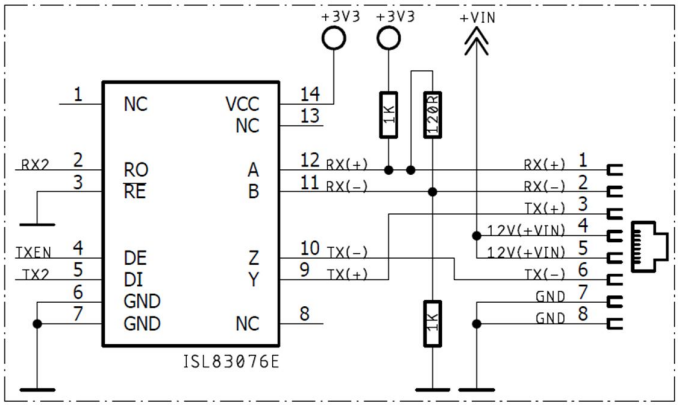


**It shows how to set Jumper of Line Driver to receive-send data as RS485 Full Duplex 4-Wire Communication.**

Please look at the diagram of setting Jumper above, when Jumper of Circuit Line Driver is set to be RS485 Full Duplex 4-Wire, a part of receiver of Circuit Line Driver is enabled all the time; so, it can receive data from the Cable all the time but the sender is controlled by Signal TXEN. Normally, this Signal TXEN is controlled to be the state of “LOW” to disable the sender of Line Driver; so, it looks like removing the Cable TX(+) and TX(-) from the circuit. If it requires sending data into the Cable, it has to set state of Signal TXEN to be “HIGH” to enable the sender; in this case, it looks like connecting the Cable TX(+) and TX(-) to the circuit. After all data are sent into the Cable successfully, it has to change the state of Signal TXEN to be “LOW” again to disconnect signal for sending data. This is a good point because it can connect more 2 devices at the same time and it efficiently sends data into the Cable in order, without crashing.

Signal on the side of receiving data of all devices, both Master and Slave, is enabled to receive data all the time, but Signal on the side of sending data of all Slave devices is controlled Enable/Disable. If it is in a normal state, it always is disabled (**Disable: TXEN=LOW**). When it is time to send data into the Bus, it has to enable the sender (**Enable(TXEN=HIGH**)) and then starts sending the data as preferred. After sent all data successfully, please disable the sender again and now the Bus is available.

## HOW TO CONNECT RS485 4-WIRE BETWEEN MASTER TO SLAVE

When connecting the Cable RS485 4-Wire between Master and Slave, it has to cross the Cable between sender and receiver. TX(+) of Master must be connected to RX(+) of Slave and TX(-) of Master must be connected to RX(-) of Slave, and TX(+) of Slave must be connected to RX(+) of Master and TX(-) of Slave must be connected to RX(-) of Master, respectively.

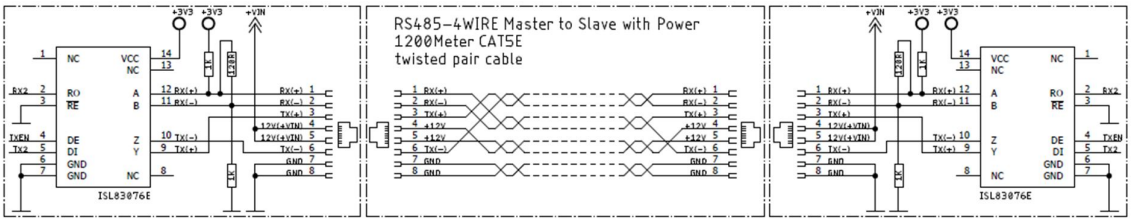


**It shows diagram of connecting RS485 4-Wire by using the same source of Power Supply for Master and Slave.**

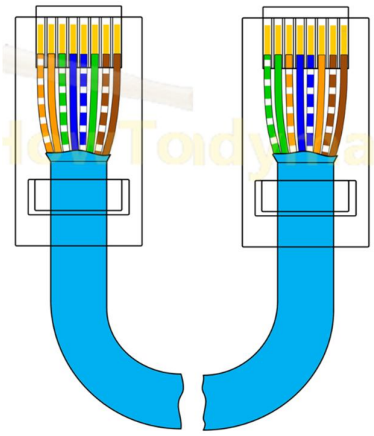

**It shows diagram of connecting RS485 4-Wire of Master and Slave.**

## HOW TO CONNECT RS485 4-WIRE BETWEEN SLAVE TO SLAVE

When connecting Slave to Slave, it connects all Slave devices together in parallel; in this case, it can use the standard Cable as T-568B Direct instantly.

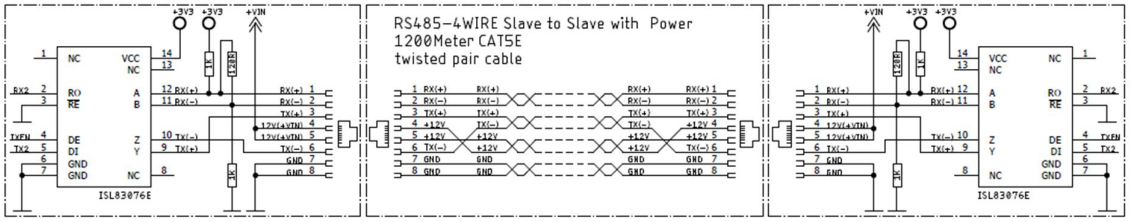


**It shows diagram of connecting RS485 4-Wire of Slave to Slave.**

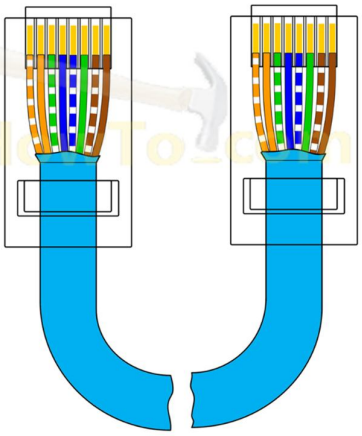

**It shows features of Cable used with RS485 4-Wire of Slave to Slave.**

## HOW TO CONNECT RS485 HALF DUPLEX 2-WIRE

It only requires a pair of Cable for this communication format; it is both receiver and sender alternately; it must control direction of all devices to receive-send data into Bus. When it is in a normal state, the direction is always setup to be a receiver. When there is an incoming data and needs response, it has to wait until the sender sends all data completely first, and then it can change the direction from receiver to be sender instead. In this case, it needs a short period during it is changing the direction from sender to receiver; after changed the direction successfully, it can send data into BUS, without any problem.

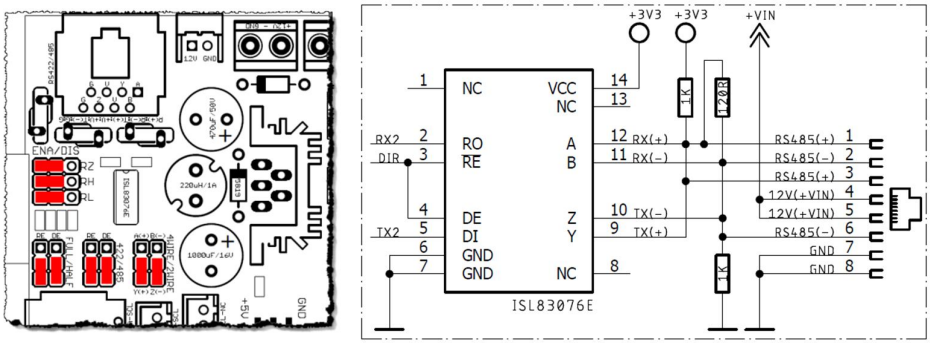


**It shows how to set Jumper of Line Driver to receive-send data as RS485 Half Duplex 2-Wire.**

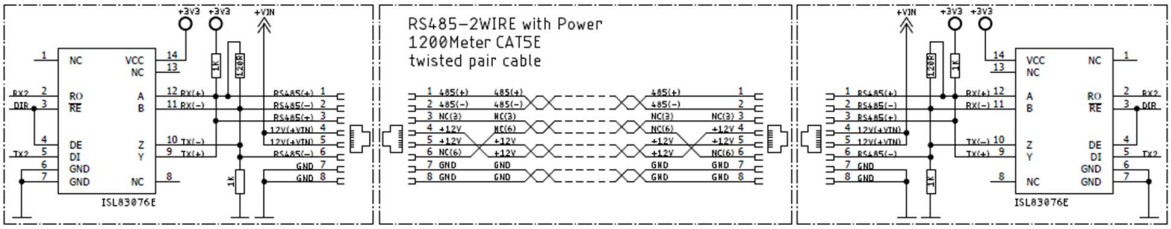


**It shows diagram of connecting RS485 2-Wire.**

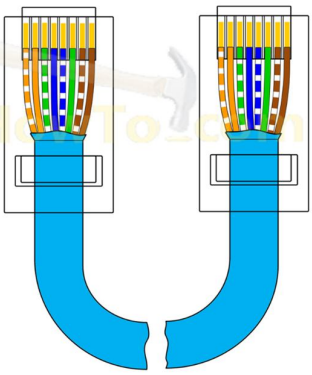

**It shows features of Cable used with RS485 2-Wire.**

## HOW TO USE I2C BUS COMMUNICATION

There are 4 types of Connector on Board ET-ESP32 RS485 to connect to I2C Bus and each type of Connector has different level of electrical signal; so any devices that will be connected with must have the same level of electrical signal. For example, if the device runs by 5V with Signal Logic 5V, it has to connect with board through Connector I2C Bus 5V; but, if the device runs by 3.3V with Signal Logic 3.3V, it has to connect with board through Connector I2C Bus 3.3V. In this case, there is no any change for writing program for communication.

- RTC (Real Time Clock) No.DS3231 or DS3232 is CHIP Time Base that is connected to Board through I2C Bus 3.3V.
- PCF8574 is CHIP I2C Output to control the operation of 8-CH RELAY OUTPUT; it is connected to Board through I2C Bus 3.3V.
- PCF8574A is CHIP I2C Input to read state of 8-CH OPTO Input; it is connected to Board through I2C Bus 3.3V.
- EEPROM 24XX16 is CHIP EEPROM that is connected to Board though I2C Bus 3.3V.
- DS2482 is CHIP that is used as Bridge between I2C Bus and 1-Wire Bus; it is connected through I2C Bus 5V.
- I2C Bus Long Length is used when it has to connect with I2C Bus in a format of Long Length for a long-distance communication up to 20 meter long. It uses Cable Twisted Pair CAT5E and Connector RJ45 8Pin.
- I2C Bus 5V is connected with I2C Bus device that runs by +5V Power Supply; in this case, there are 2 alternatives of Connector; RJ11 6Pin and Connector Wafer 4Pin.
- I2C Bus 3.3V is connected with I2C Bus device that runs by +3.3V Power Supply, and there is Connector Wafer 5Pin.

| I2C Bus Long Length | I2C Bus 5V | I2C Bus 5V | I2C Bus 3.3V |
|---|---|---|---|
| 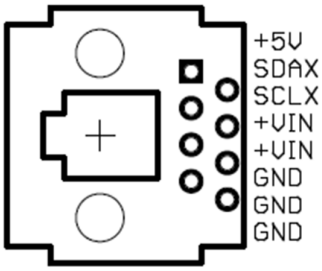 | 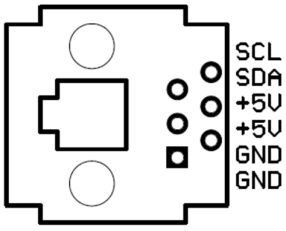 | 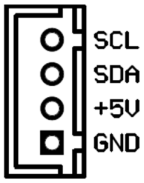 | 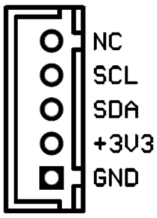 |

**Table shows the arrangement of various types of Connector I2C Bus.**

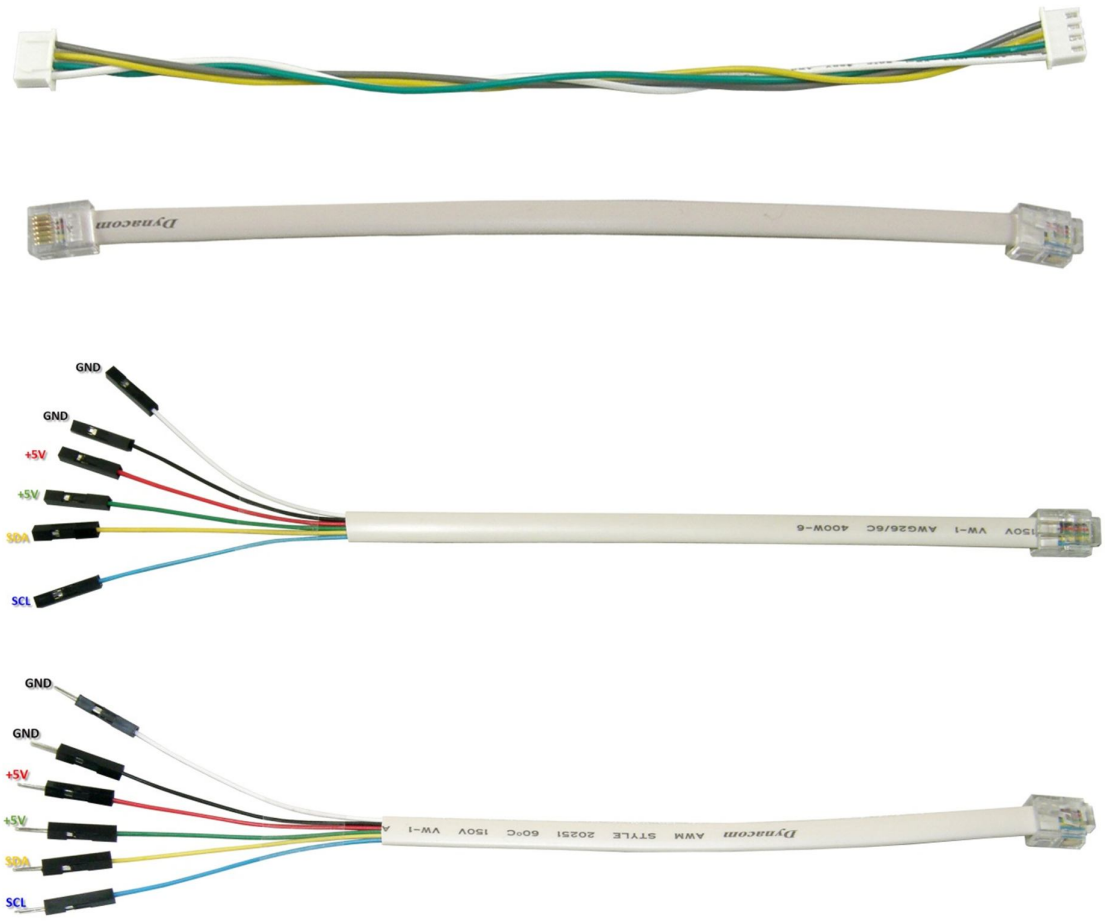


It shows example of Cables.

## HOW TO USE OPTO-INPUT

There are 8 sets of Circuit OPTO-Input on Board ET-ESP32 RS485 and each set runs separately; moreover, there is Jumper to choose format of Input to be either NPN(Sink) or PNP(Source). It supports Input Voltage 12V and it can be used with Input Sensor that is Contact Switch/Relay or NPN(Sink) or PNP(Source) as preferred; moreover, there is LED to show operating state of INPUT in each channel.

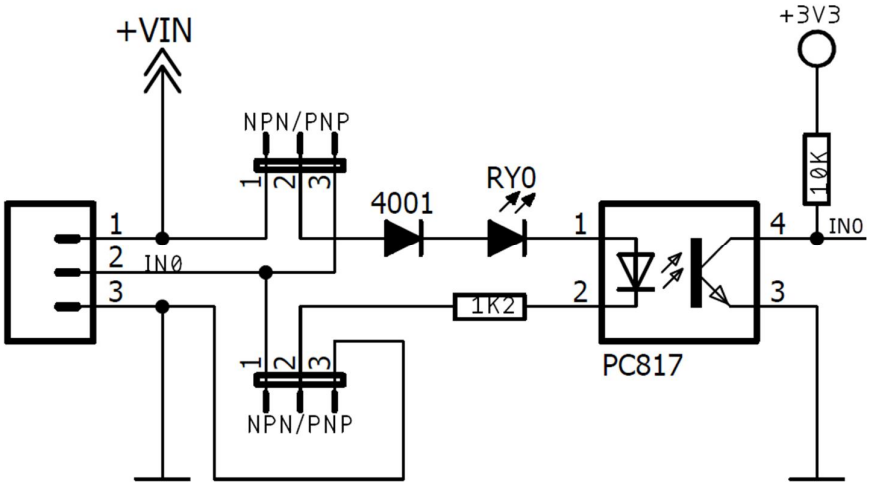


**It shows Circuit of OPTO Input.**

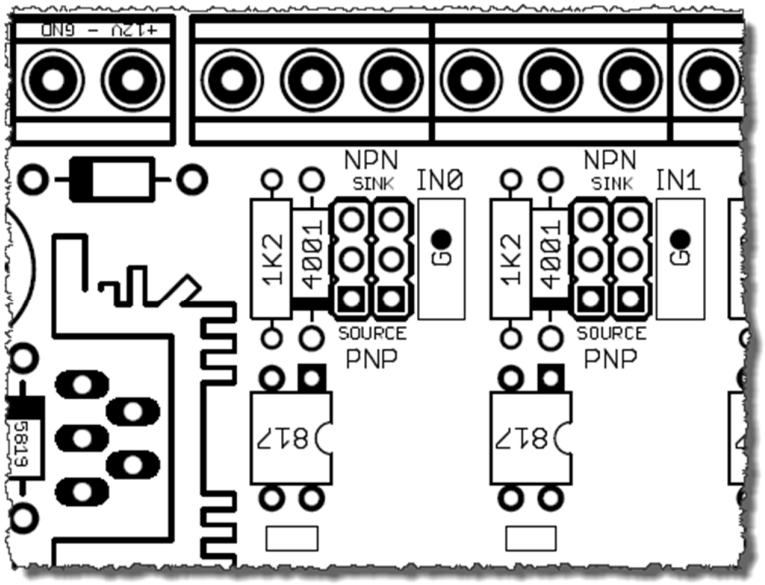

## HOW TO APPLY OPTO INPUT AS NPN TYPE

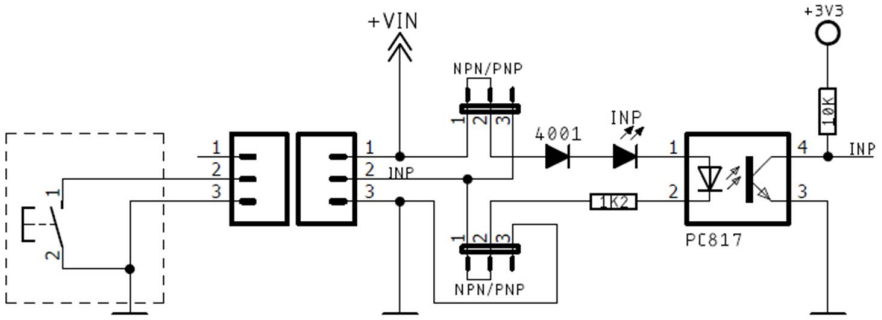


It shows an example of connecting Input Switch Contact together with NPN Input.

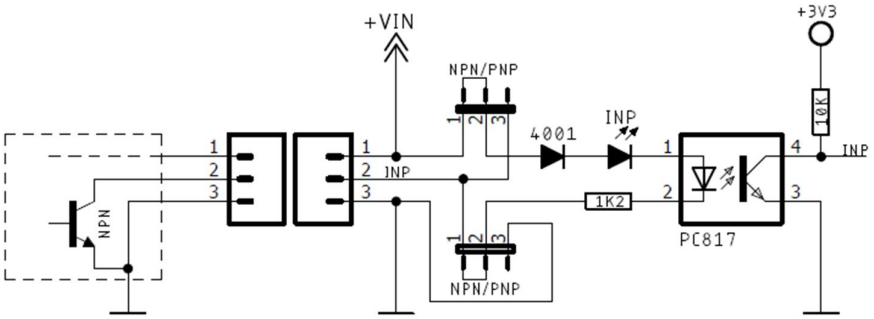


It shows an example of connecting Input together with NPN Sensor.

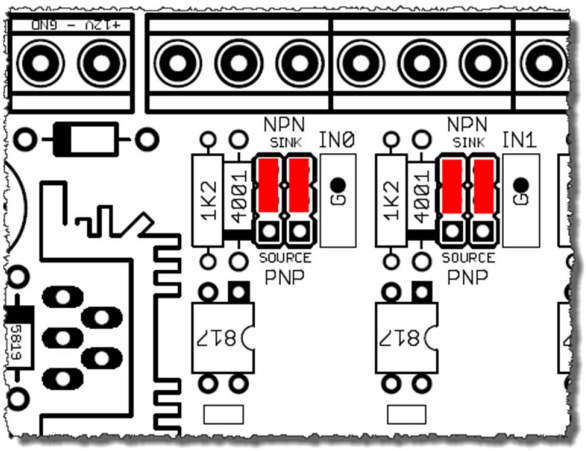


It shows how to set Jumper of OPTO INPUT as NPN type.

## HOW TO APPLY OPTO INPUT AS PNP TYPE

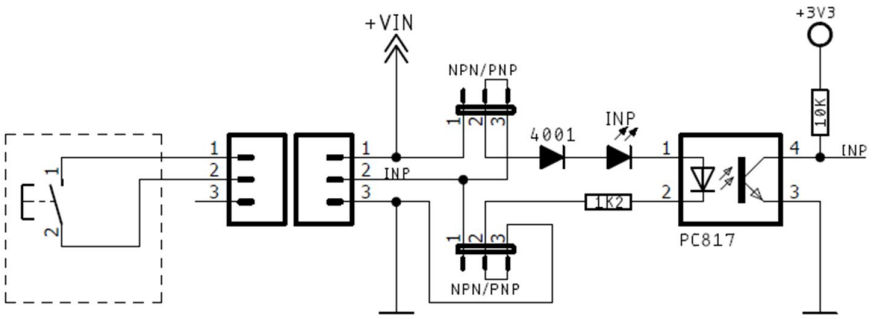


It shows an example of connecting Input Switch Contact together with PNP Input.

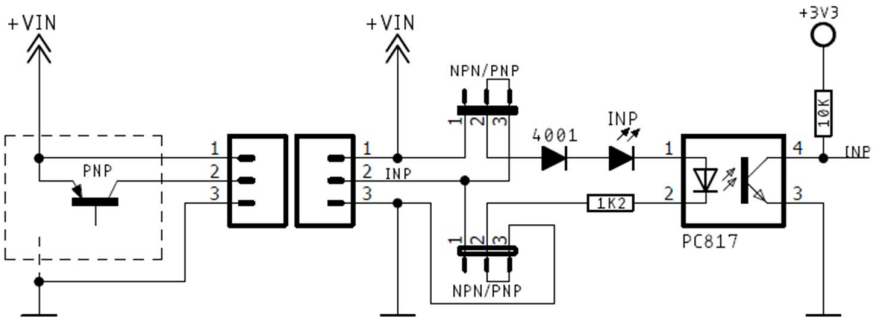


It shows an example of connecting OPTO Input together with PNP Sensor.

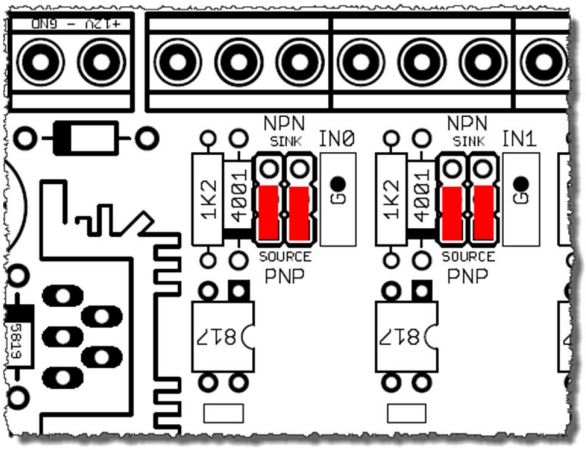


It shows how to set Jumper of OPTO INPUT as PNP Type.

## HOW TO USE RELAY OUTPUT

For Board ET-ESP32 RS485, there is a Circuit Relay Output as 1 Contact Switch NC/COMMON/NO that consists of 8 Channels. It controls the operation of Relay through PCF8574. When the state of Signal Output Pin of PCF8574 is set as “LOW”, it enables ON Relay; on the other hand, when the state of Output Pin of PCF8574 is set as “HIGH”, it enables OFF Relay, instead. Normally, the Default value of all channels of Board Relay is always set as OFF because it prevents Output from auto-running after initially provided Power Supply into board. A set of Board ET-ESP32 RS485 consists of 8-CH Output Relay and each channel runs separately. Each set of Output has a Connector Terminal 5mm 3Pin to be connecting point for Contact Relay NO/COMMON/NC. Each set of Contact can receive a maximum Current of 3 Amp. The specification of this Contact is similar to Switch ON/OFF of electrical appliances. When Relay is inactive that is in a normal state, this Contact is disconnected like Switch OFF; on the other hand, when Relay is active, this Contact is connected together like Switch ON. So, this Contact Relay can be applied to Switch ON/OFF of electrical appliance instead of general Switch, without any problem. This Contact Relay is more special than general Contact Switch because it is unnecessary to be pressed by finger in order to control Switch ON/OFF; it only defines any preferable conditional operation of program to control of this Contact Switch instead. When Logic Output of PCF8574 as set as “LOW”, it enables ON Relay; but, when Logic Output of PCF8574 is set as “HIGH”, it enables OFF Relay, instead.

If this Contact Relay is used to turn on/ turn off electrical appliances that require high range of current, especially coil devices such as electrical valve and motors; these devices pull high range of current through its own up to 2 or 3 times in order to start and boot up. While it is in a process of ON and OFF, the sudden surge of electricity on the Contact always occurs, arc happens and signal interrupts other electrical appliances that are connected together in the same electrical system. In this case, it can put MOV(Varistor) across the Contact to reduce this serious surge of electricity on the Contact. It installs MOV beside each set of Connector of Contact NO and COMMON of Board ET-ESP32 RS485 in order to prevent the Contact from arc while being ON/OFF Contact. There are various sizes of MOV, please choose the most proper size and types of voltage, direct current or alternating current, in order to be Switch ON/OFF of electrical appliances.

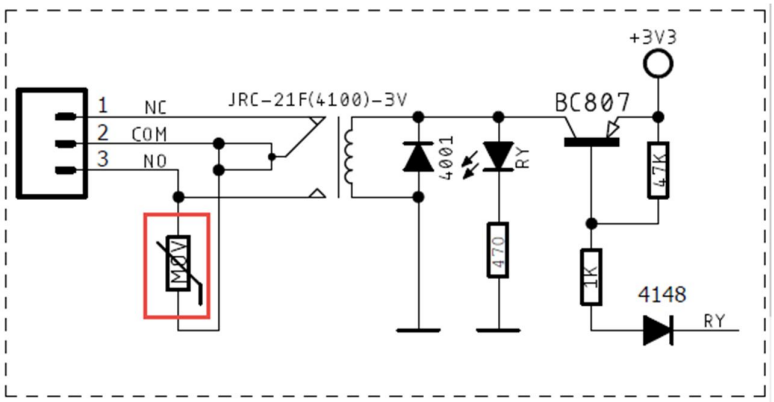

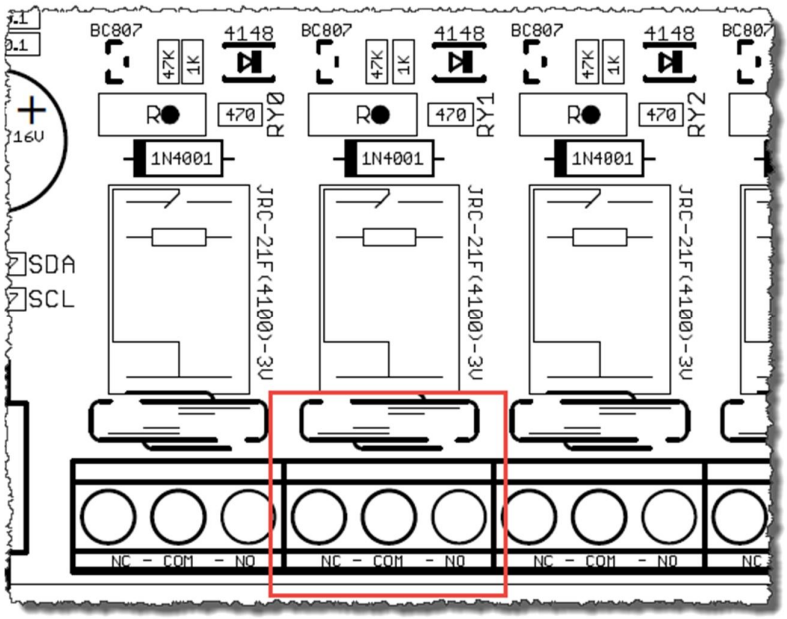


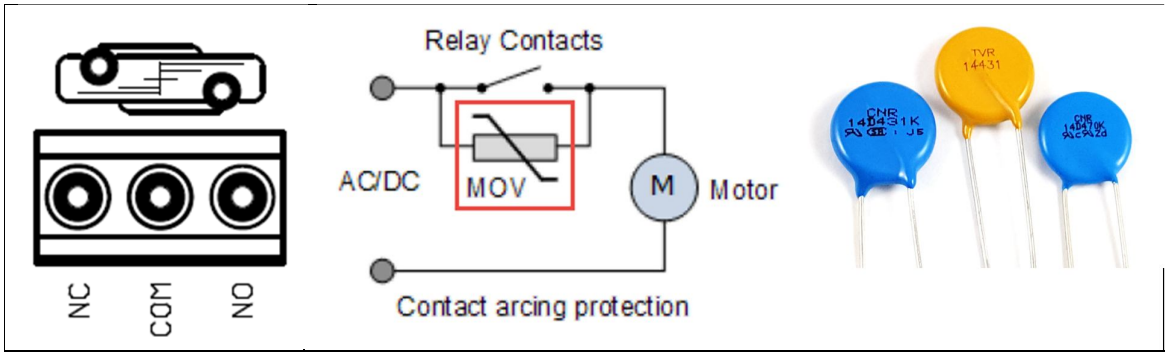


**It shows Circuit and position for installing MOV to prevent Contact Relay from arc or sudden surge.**

## HOW TO SETUP ADDRESS I2C OF PCF8574/A

There are 2 numbers of CHIP that can be installed on Board ET-ESP32 RS485; CHIP PCF8574 or PCF8574A; it controls the operation of Relay Output and reads state of OPTO Input. For standard ETT Board, it normally installs CHIP No.PCF8574 to control Relay Output and No.PCF8574A to read state of OPTO Input completely. It can set Jumper A0, A1 and A2 internal Board to choose and setup 8 different Address Positions for Chip's connection as shown in the table below.

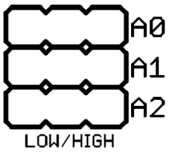


| SETTING JUMPER OF ADDRESS | | | ADDRESS POSITIONS | | |
|---|---|---|---|---|---|
| A2 | A1 | A0 | Address | PCF8574 | PCF8574A |
| LOW | LOW | LOW | 0 | 0x20 : 0010 0000(0:W) | 0x38 : 0011 1000(0:W) |
| LOW | LOW | HIGH | 1 | 0x21 : 0010 0001(0:W) | 0x39 : 0011 1001(0:W) |
| LOW | HIGH | LOW | 2 | 0x22 : 0010 0010(0:W) | 0x3A: 0011 1010(0:W) |
| LOW | HIGH | HIGH | 3 | 0x23 : 0010 0011(0:W) | 0x3B : 0011 1011(0:W) |
| HIGH | LOW | LOW | 4 | 0x24 : 0010 0100(0:W) | 0x3C : 0011 1100(0:W) |
| HIGH | LOW | HIGH | 5 | 0x25 : 0010 0101(0:W) | 0x3D : 0011 1101(0:W) |
| HIGH | HIGH | LOW | 6 | 0x26 : 0010 0110(0:W) | 0x3E : 0011 1110(0:W) |
| HIGH | HIGH | HIGH | 7 | 0x27 : 0010 0111(0:W) | 0x3F : 0011 1111(0:W) |

**Table shows Address Positions of I2C BUS of Board when using with Library of Arduino.**

## HOW TO USE LONG LENGTH I2C BUS

Normally, the I2C Bus Communication that uses Electrical Signal as TTL Logic can be connected to communicate in the same circuit; or, it is connected between boards by cable for a short distance communication of a 12-inch long or it does not exceed 1 meter long. Some applications require connecting to I2C Bus device for a longer distance communication such as I2C Bus Sensor. To respond to various requirements of Board ET-ESP32 RS485, it adds additional Circuit Long Length Driver internal I2C Bus; the distance of communication is expanded to 20 meters long when connecting via Cable. It uses CHIP P82B715 to convert Signal from TTL and send data for a longer distance. In this case, the device at the destination must use the same CHIP P82B715 to be Line Driver as the Board and then both devices can be communicated together through Cable Twisted pair CAT5E, without any problem.

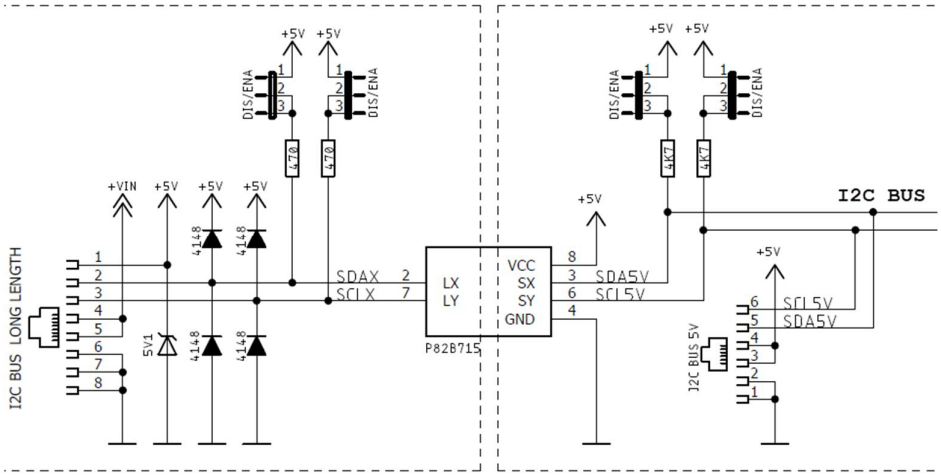


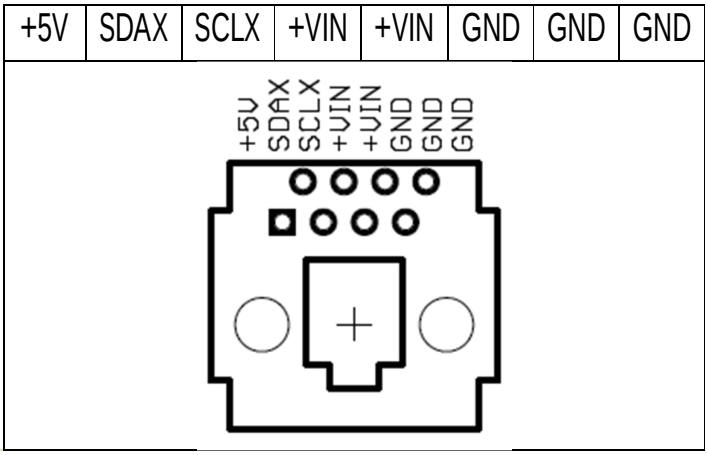


**It shows arrangement of Signal I2C Long Length and Connector RJ45.**

When connecting many boards together in a format of I2C BUS Long Length like network, it requires Cable Twisted Pair (CAT5E) that is connected as same as Direct LAN Network under the standard of EIA/TIA T568A or EIA/TIA T568B. This Cable is used to communicate and provide Power Supply to devices on board at the same time. However, if it must connect additional devices more than existing devices on board and those devices requires high Current, this cable size and Contact of Connector RS45 may not support. It should separate Cable that is used to be a pair of Power Supply; in this case, it should choose the proper size in order to support high Current enough for electrical appliance's demand.

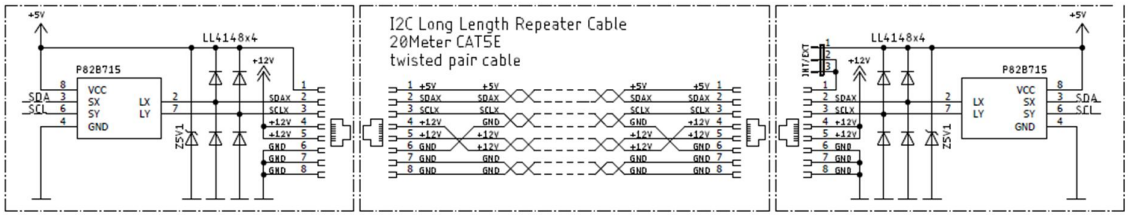


**It shows diagram of connecting many boards together in a format of I2C Long Length by using Cable Twisted Pair (CAT5E).**

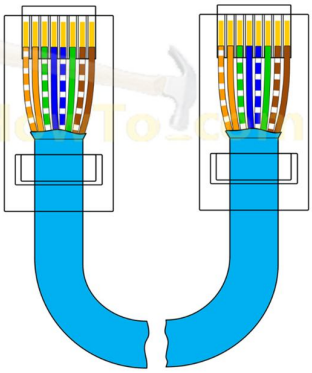

**It shows features of Cable used with I2C Long Length (20 meter long).**

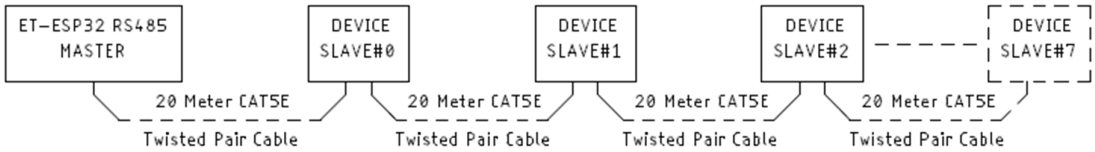


**It shows diagram of connecting many boards together in a format of I2C Long Length like Network.**

## HOW TO USE REAL TIME CLOCK: RTC DS3231/DS3232

There is CHIP Time Base RTC: Real Time Clock No.DS3231 and Battery Backup on Board ET-ESP32 RS485 that can be applied to be actual clock in order to setup time to ON/OFF electrical appliances. Moreover, this DS3231 can be used to set alarm or notification; there are various types of notification that can be setup and choose according to user's requirements. For example, if Alarm is setup by the value of date as 1 and time of hour, minute and second as 07:30:00, Alarm will ring when it reaches the defined date and time. Or, if requires setting repeated Alarm by setting date as Wednesday and time as 00:00:00, it receives the notification on every Wednesday at 00:00:00. Or, it setup Alarm by setting time of hour, minute and second.

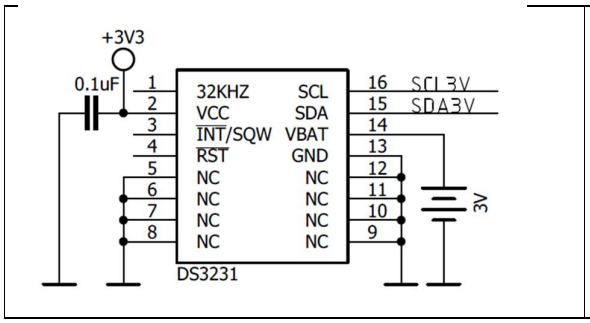


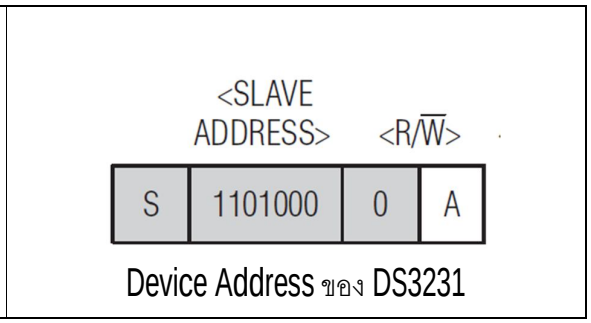


## HOW TO USE EPROM: 24LC16B

There is I2C EEPROM 16Kbit(2Kbyte) No.24LC16B on Board ET-ESP32 RS485 that can be applied to store essential values such as Configurations values to setup operation of board.

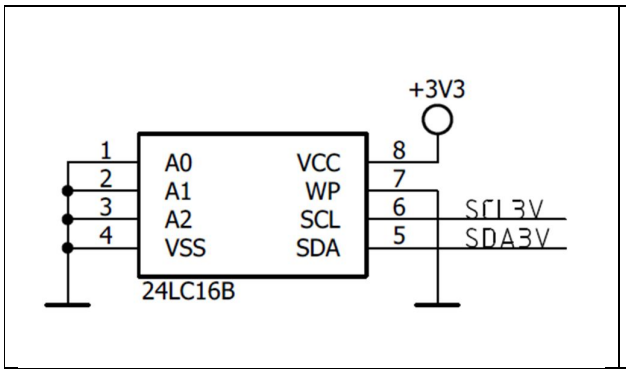


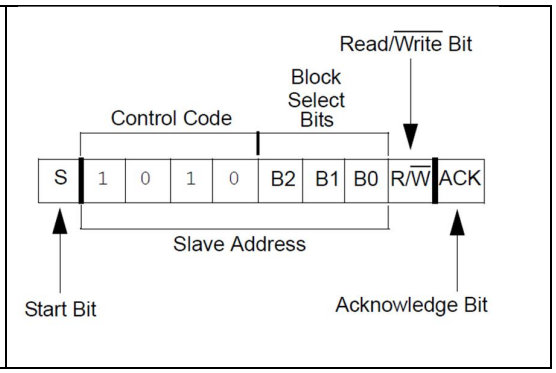

## HOW TO USE 1-WIRE BUS

There is 1-Wire Bus on Board ET-ESP32 RS485 that can be connected to 1-Wire Bus device. It is connected by Bus System of I2C Bus through CHIP Support No.DS2482 that is used as an intermediate between I2C Bus and 1-Wire Bus. It uses Connector Wafer 3Pin to be connecting point with 1-Wire Bus.

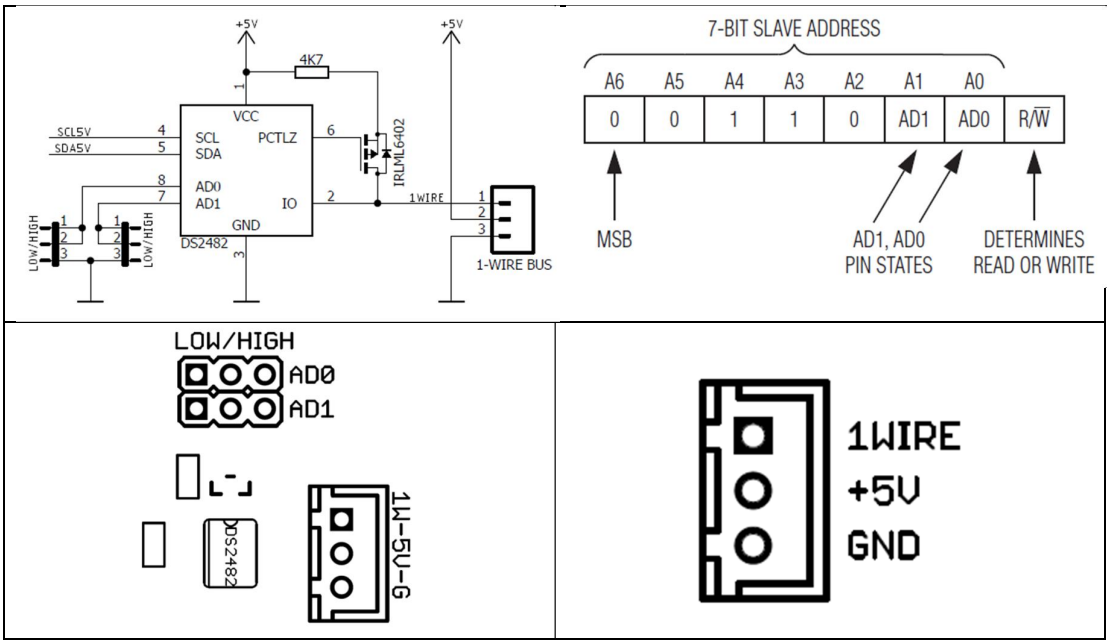


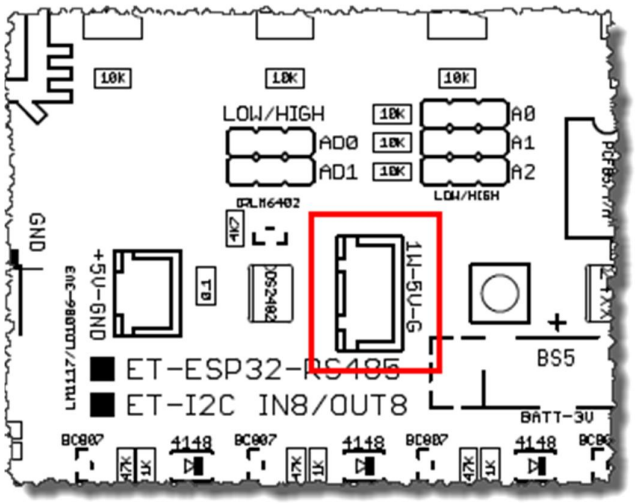

## POWER SUPPLY

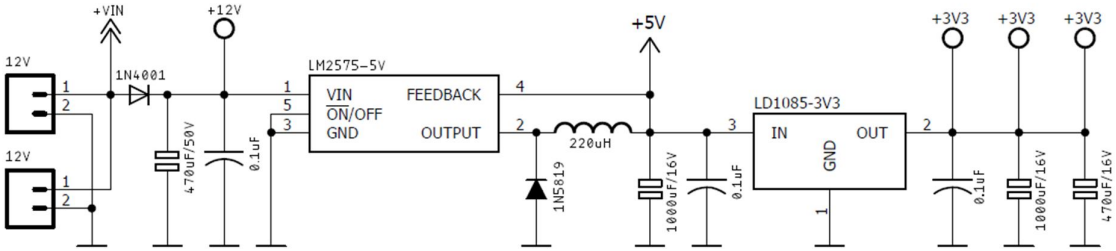


Board ET-ESP32 RS485 requires 3 levels of POWER SUPPLY; +12V, +5V and +3.3V. It receives external DC Input 12V (not exceed 35V) through Circuit Regulate and then convert into +5V and +3.3V to provide to circuits internal board. There are 4 sets of Connector that can receive incoming DC Input Voltage as listed below;

- Connector Terminal 2Pin receives external Power Supply to board.
- Connector Wafer 2Pin receives external Power Supply to board.
- Connector RJ45 of I2C Long Length receives external Power Supply to board and it also provides Power Supply from its own board to other connective boards through this Connector RJ45 of I2C Long Length.
- Connector RJ45 of RS422/485 receives external Power Supply to board and it also provides Power Supply from its own board to other connective boards through this Connector RJ45 of RS422/485.

| Terminal 2Pin | Connector 2Pin | RJ45 I2C Long Length | RJ45 RS422/485 |
|---|---|---|---|
| 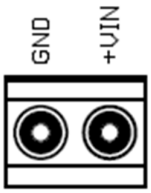  | 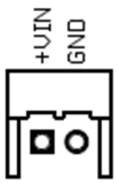  | 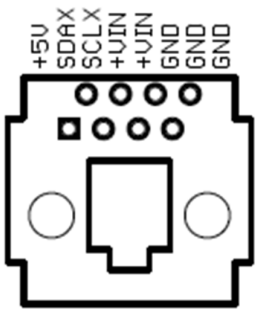  | 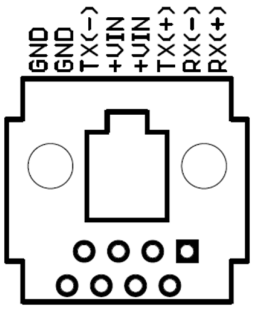  |

**Table shows position of Power Supply internal connectors.**

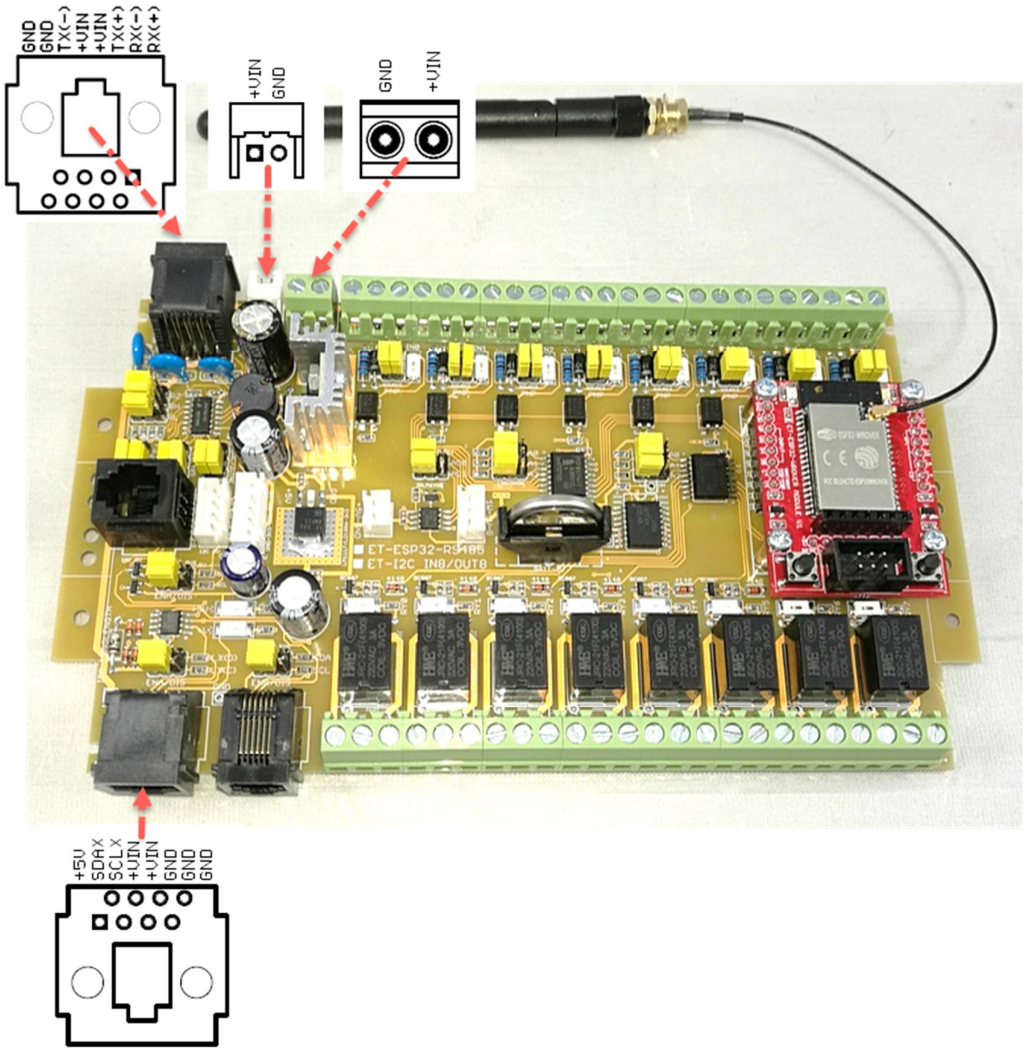


**It shows position of Connector that receives VIN Voltage to be Power Supply of Board.**

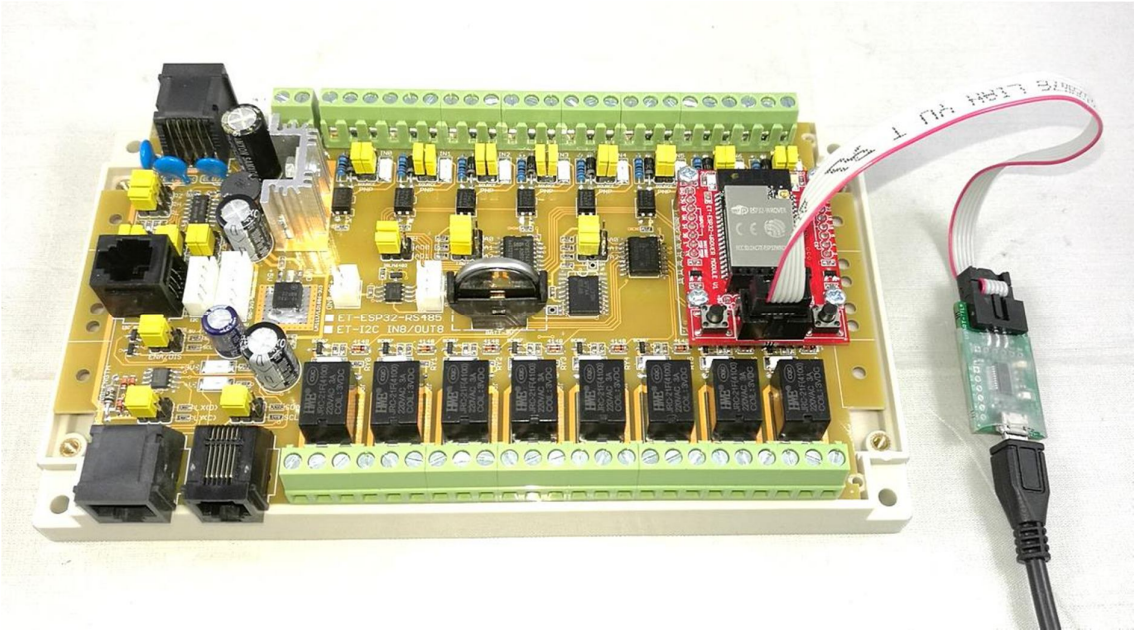


**It shows how to connect ET-USB USART/TTL together with Board to upload program.**

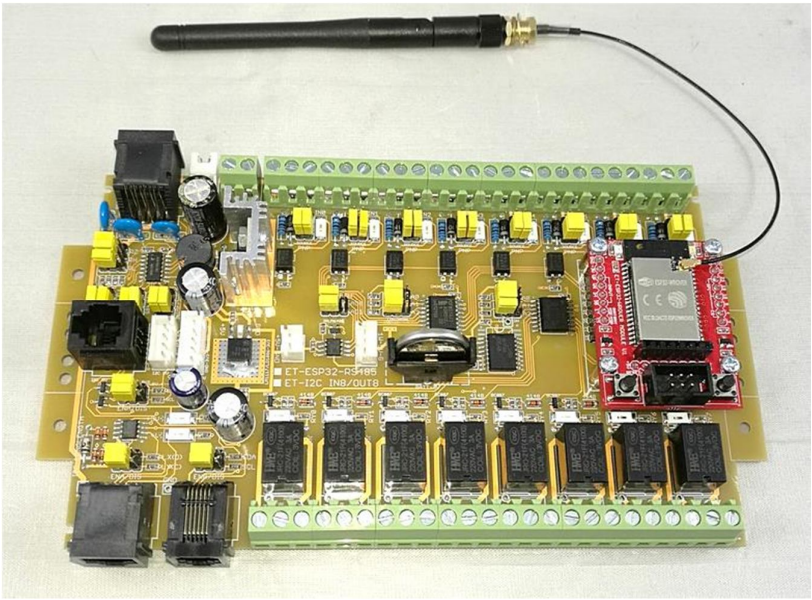


**It shows how to install external antenna.**

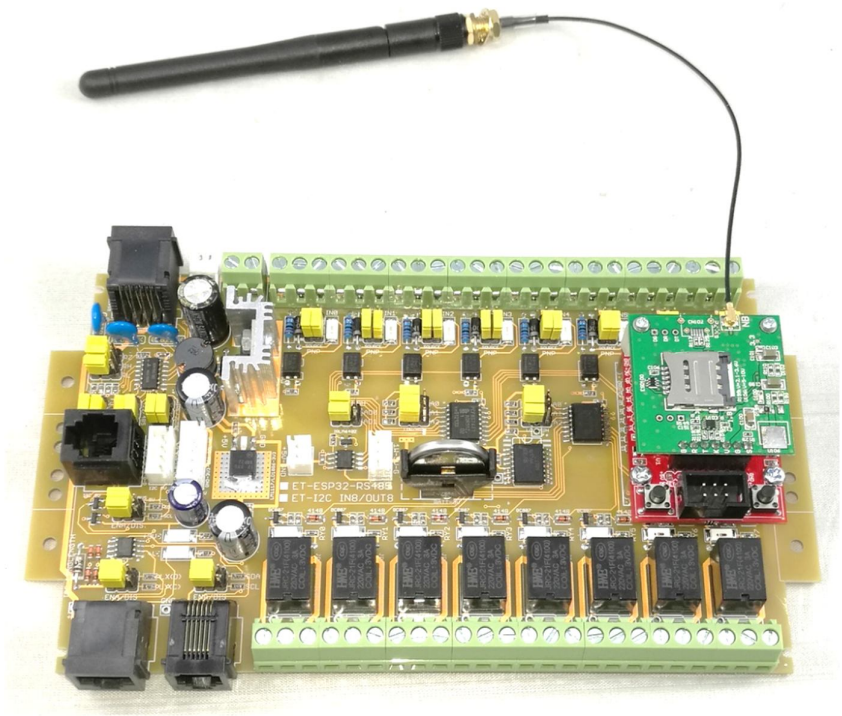


**It shows how to install the device for using with NB-IoT model “SIM7020E”.**

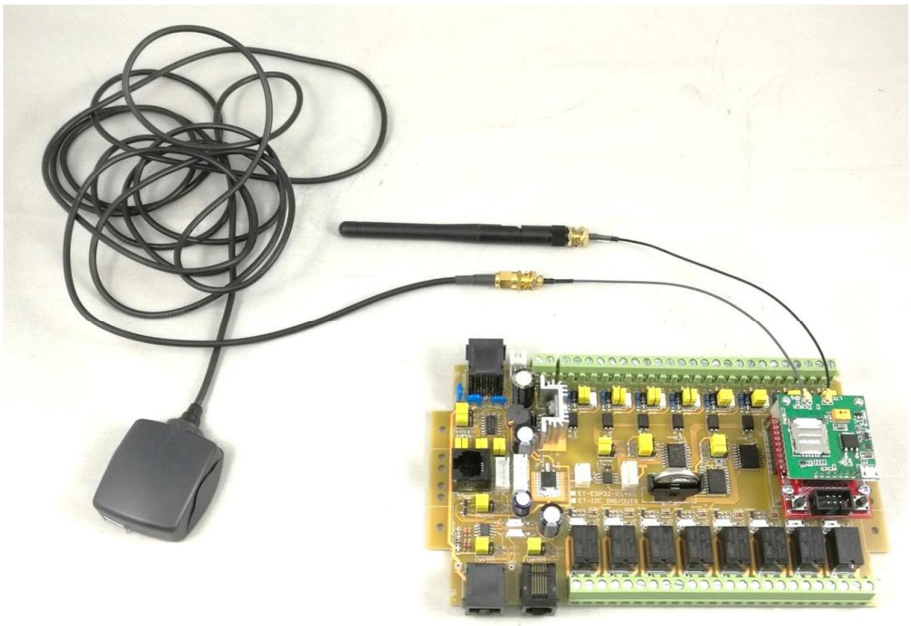

**It shows how to install the device for using with NB-IoT model “SIM7000E”.**

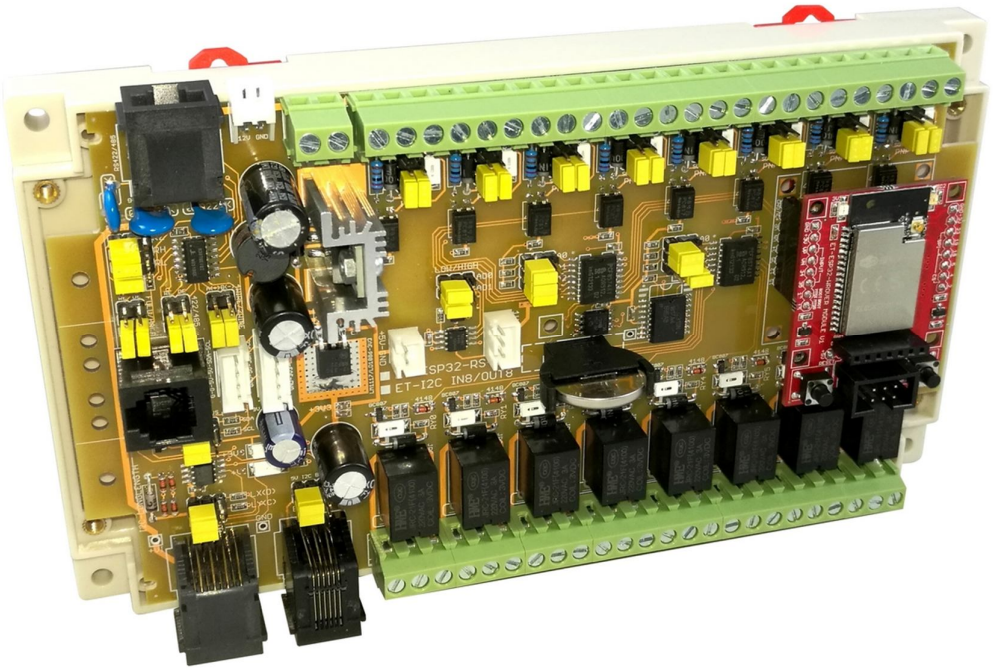


**It shows how to install the device for using with BOX and DIN Rail.**